OMNIA LEATHER

EST. 1989

Kingsley

Standard, Armless & Ottomans

Put Green Arrows with Red Arrows to Create Sectional Groups

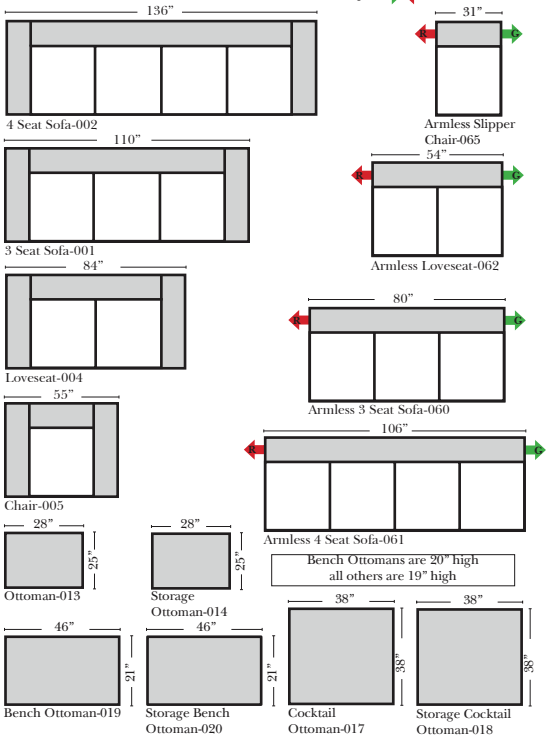

Bumper Chaise & Return Chaise

Green Arrows with Red Arrows to mix with some of the L-Shaped pieces.

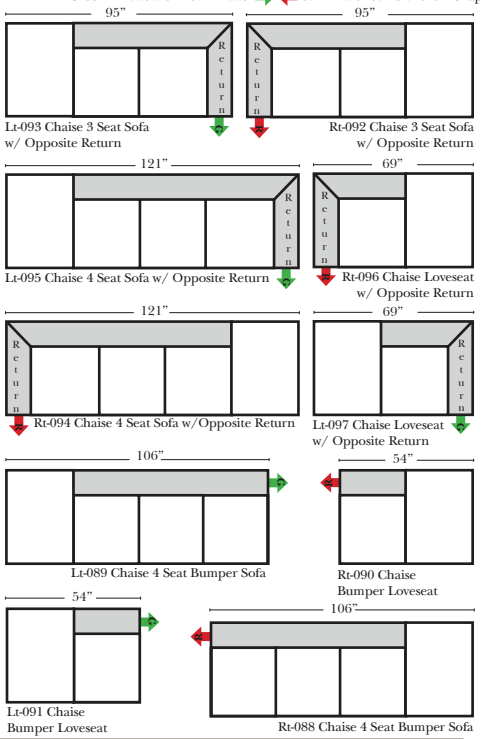

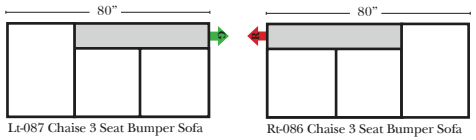

L-Shape / 90 Degree Sectional (All 4 seat items ship as one piece if stationary, two pieces if motion installed)

Put Green Arrows with Red Arrows to Create Sectional Groups

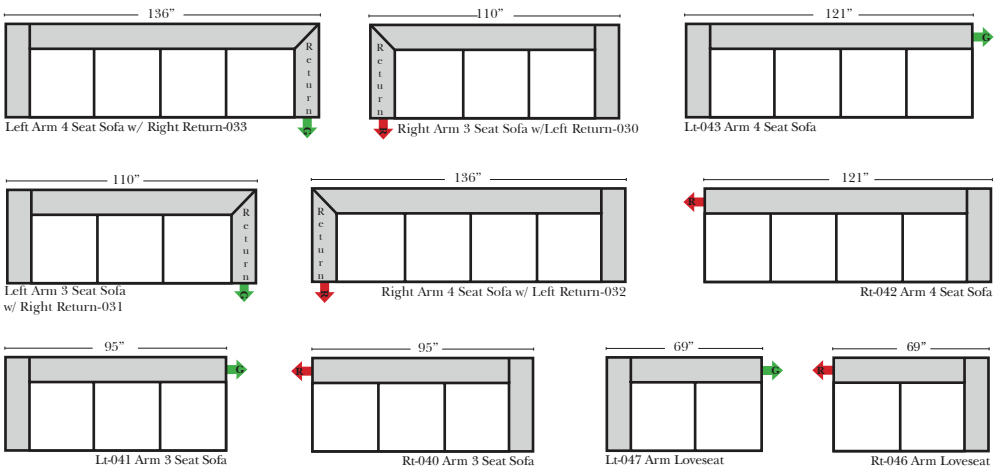

Suggested Configurations

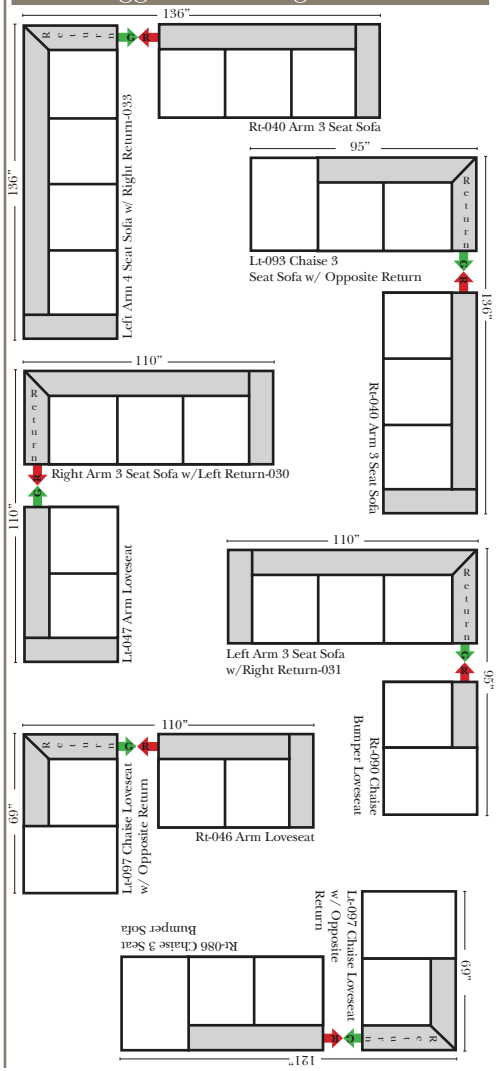

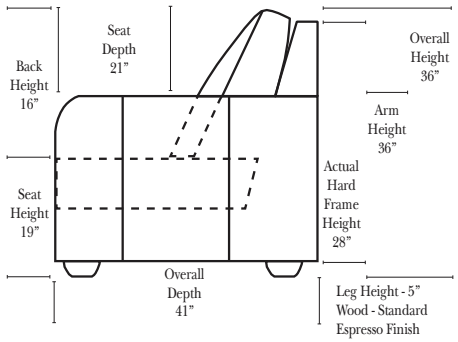

Features

Standard:

- Available in Full & Top Grain Leathers
- Available in Luxury Fabrics
- All Hardwood Frames
- Nail Heads on seat panel, and front arm panels
- Wood Base - Espresso Finish (N/C Honey Oak Option)

Options:

- Down Seats & Down Backs (additional Charge)
- No. 33 Firm Foam

Sleeper Options: **(No Sleepers are available for this style)**

Note:

All Dimensions are approximate, if accuracy is crucial, please contact us for validation of the dimensions shown. However, a 1” to 2” variance can still apply due to foam and upholstery.

07/06/2012