OMNIA®
LEATHER
EST. 1989

Jax 3 Super
(Deluxe or Studio)

Standard / Ottomans / Armless

Put Green Arrows with Red Arrows to Create Sectional Groups

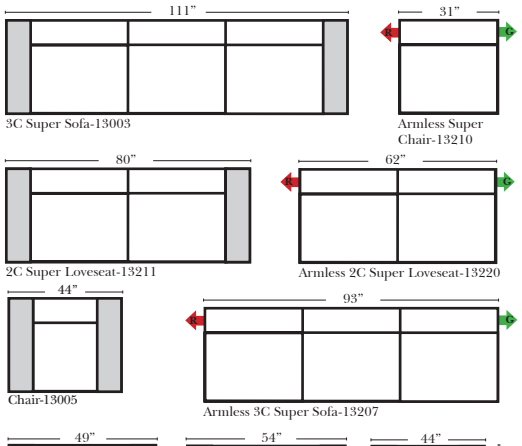

All Ottomans are 19” High

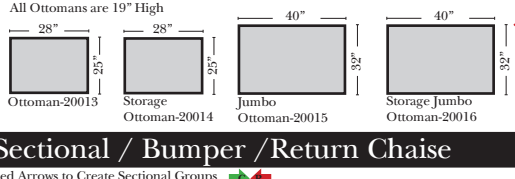

Suggested Configurations

v.03.09.21

The Suggested Configurations below are only a sample of what the imagination can create, please enjoy creating the configuration that fits your lifestyle, using the ideas below.

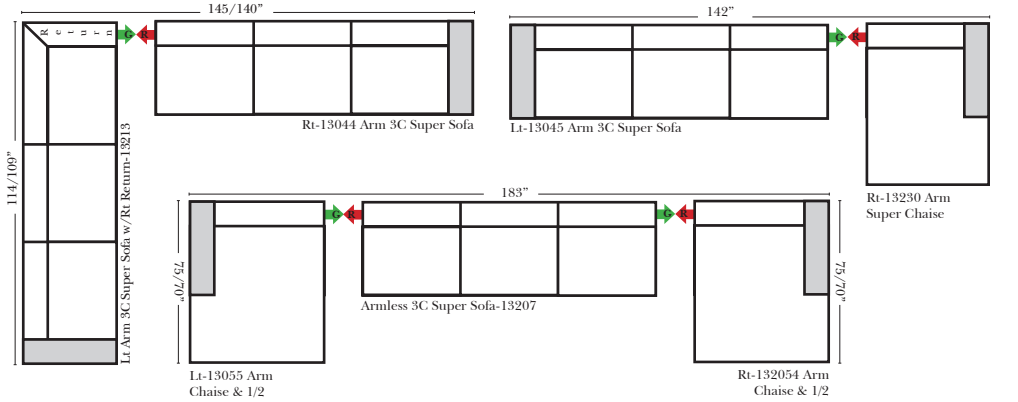

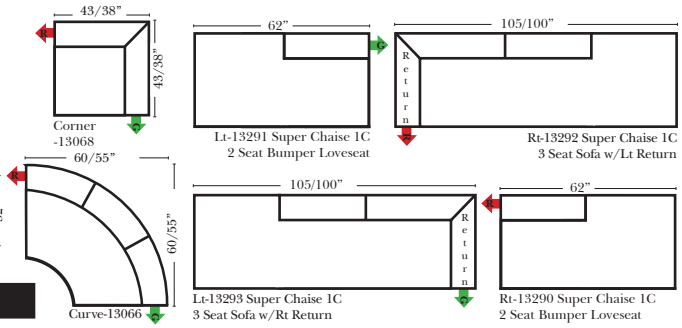

L-Shape / 90 Degree Sectional / Bumper /Return Chaise

Put Green Arrows with Red Arrows to Create Sectional Groups

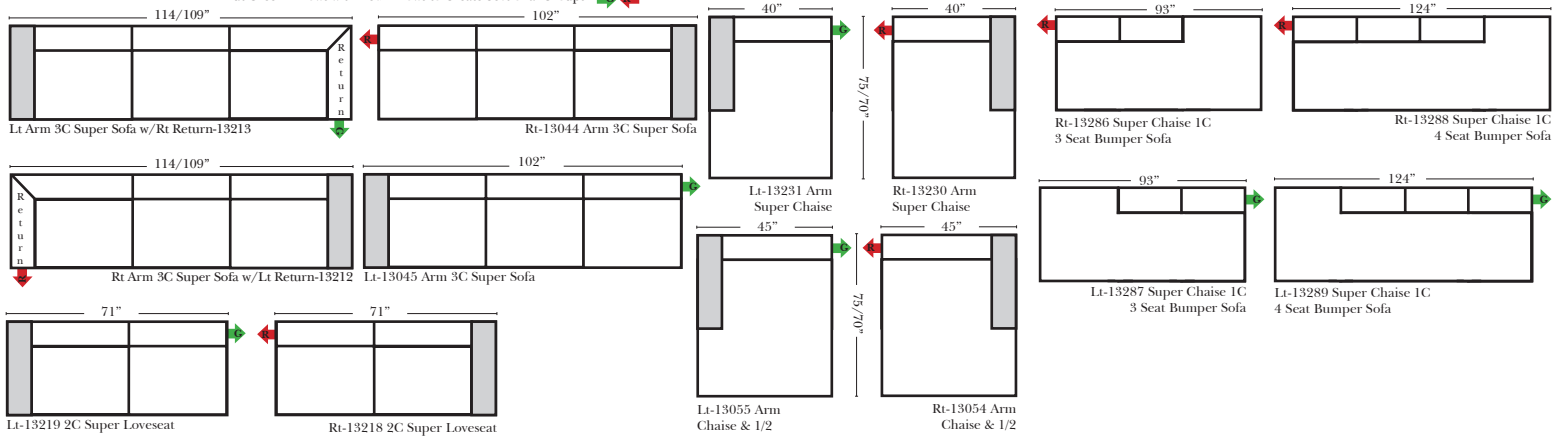

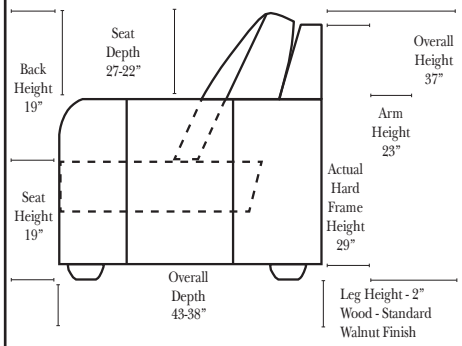

Standard & options

Standard:

- Available in Full & Top Grain Leathers
- Available in Luxury Fabrics
- All Hardwood Frames
- Wood Leg Finish (Standard is Walnut)
- Nail Heads (where Shown)

Options: **(No Additional Charge)**

- No. 33 Firm Foam Cushions
- Wood Leg Finish(Available in Cherry, Chocolate, Espresso, Honey Oak, & Shadow)

Options: **(additional Charge)**

- Down Seats & Down Backs
- Upholstered Swivel Base(2 arm Chair Only) (Not available on Super Chair or Chair & 1/2)

Sleeper Options: **(N/A on this Style)**

Note:

All Dimensions are approximate, if accuracy is crucial, please contact us for validation of the dimensions shown. However, a 1” to 2” variance can still apply due to foam and upholstery.